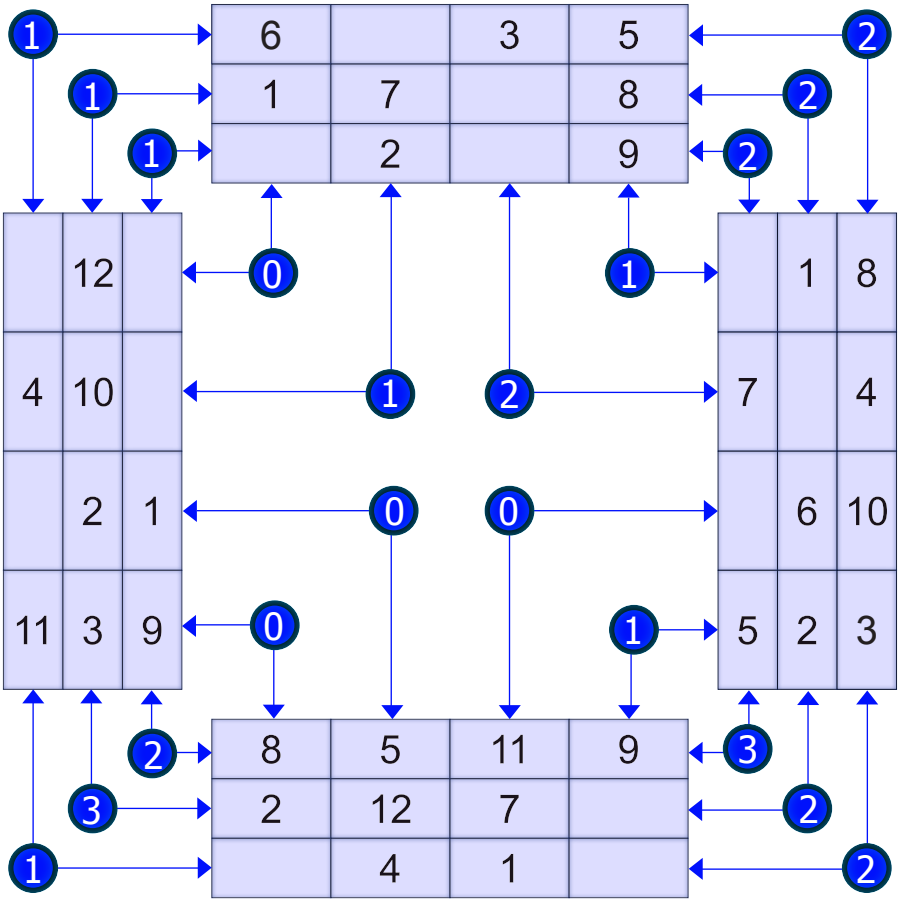

© Raden Mas